Data Sheet

Article number: 2301078823
Description: E+G Handwheel
VRTP.200+I-A20

Measures

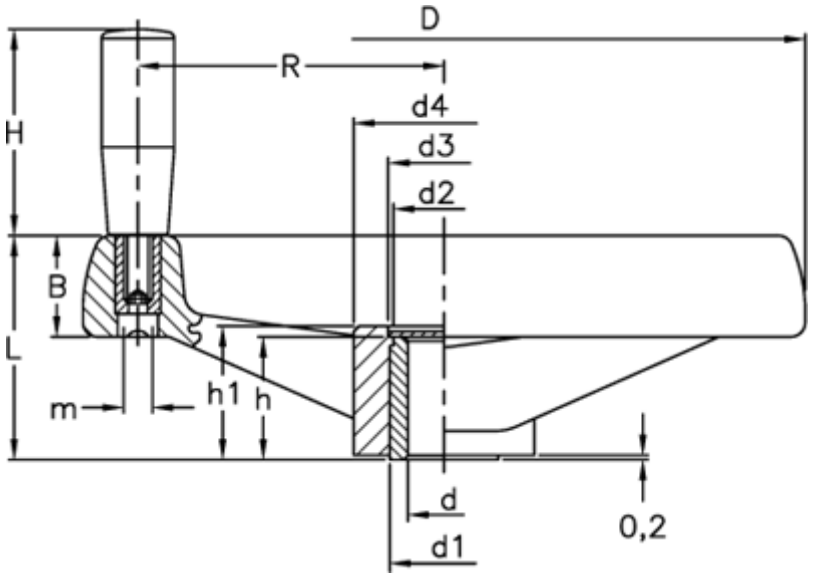

B	= 28	H	= 80
C (N m)	= 300	h	= 34
D	= 200	h1	= 36
d1	= 30	L	= 61
d2	= 28	L (J)	= 24
d3	= 31	m	= M8
d4	= 50	R	= 84
d H7	= 20		

Product drawings and brochures of any kind may contain errors for which Brd. Klee A/S cannot be liable.